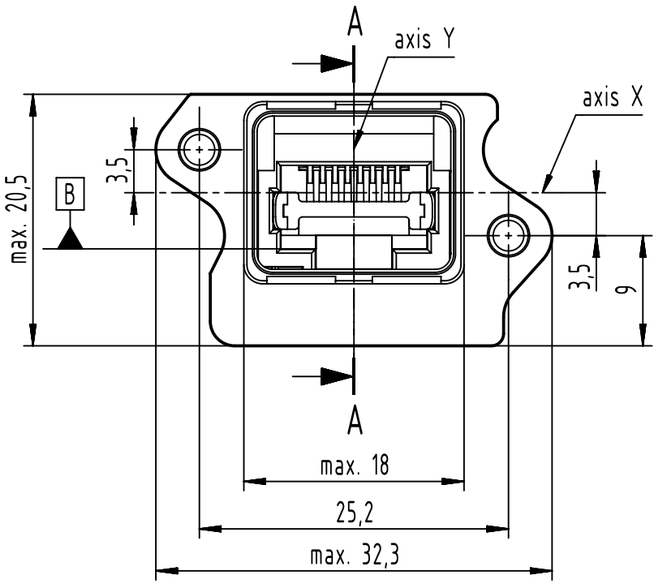

A-A

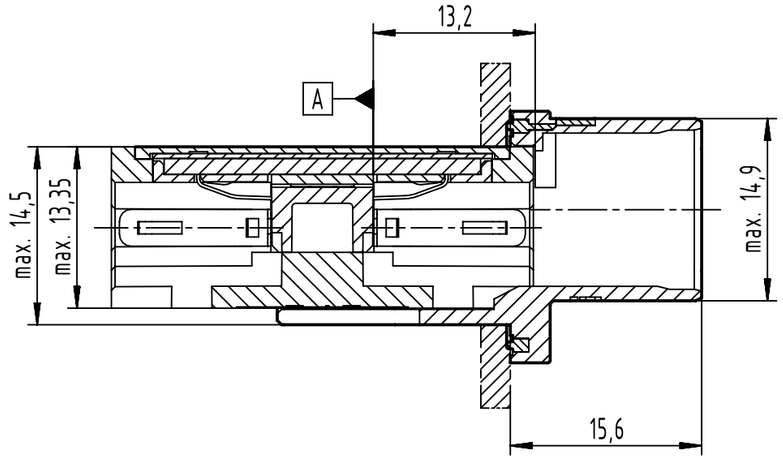

panel cutting

panel thickness = max. 3.5mm
no limit with pre-assembled
RJ45 Adapter

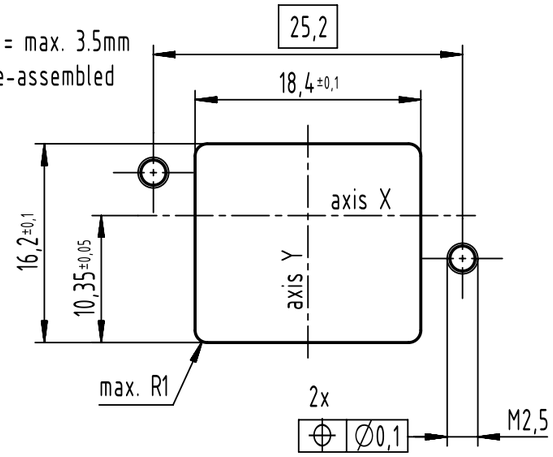

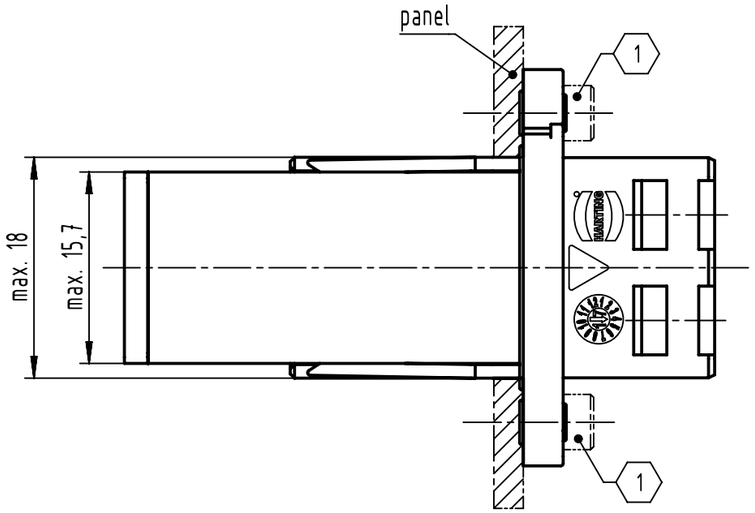

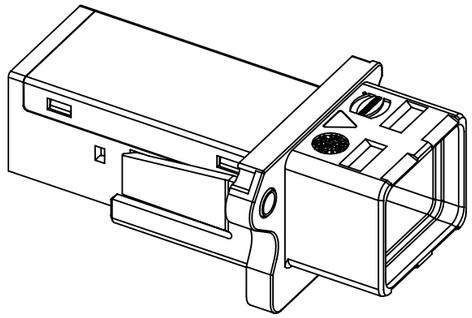

connector pitch on panel:
axis X = 27mm and axis Y = 21mm

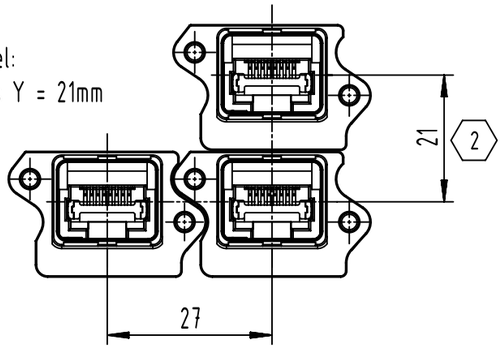

(2) connector pitch with coding clip 0945840002X Y = 23mm

(1) 2x M2.5; screws acc. to ISO 4762;
please order separately; bolting torque 0.3Nm - 0.5Nm

further information see product data sheet

All Dimensions in mm Original Size DIN A3	Scale 2:1	Free size tol.		Ref. Sub.	
All rights reserved	Created by ZWAHR	Inspected by ELLERMANN	Standardisation	Date 2023-07-13	State Final Release
Department EL PD	Title PushPull V4 PFT, 10G, Cat.6A, 8-pin				Doc-Key / ECM-Nr. 100671787/UGD/000/E 500000248131
HARTING D-32339 Espelkamp	Type TB	Number 09452451561		Rev. E	Page 1/1

A3