B
contact arrangement

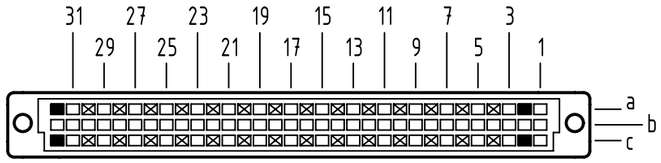

28 solder contacts
4 kinked solder contacts

⊠ = solder contact

■ = kinked solder contact

□ = position without contact

A (2:1)

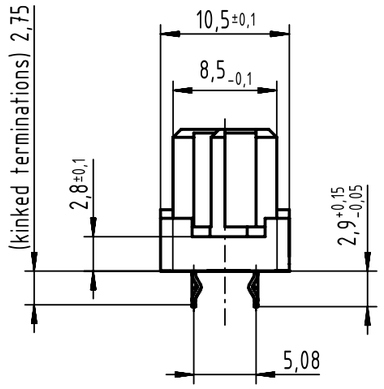

B
board drillings

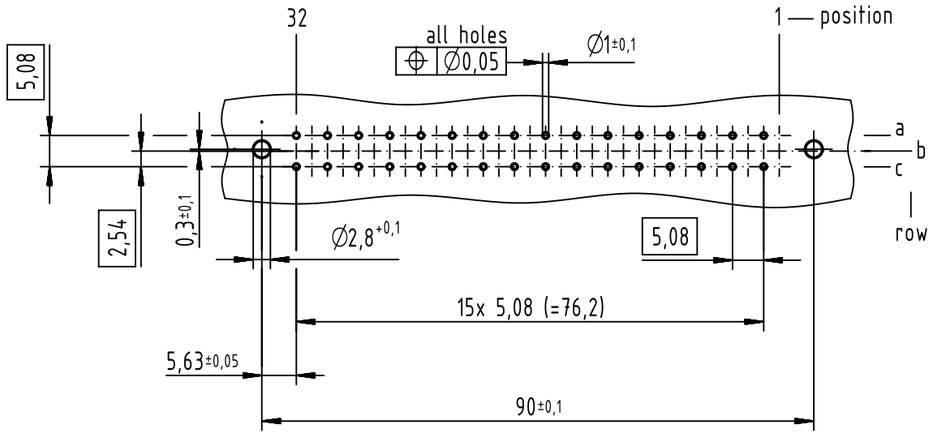

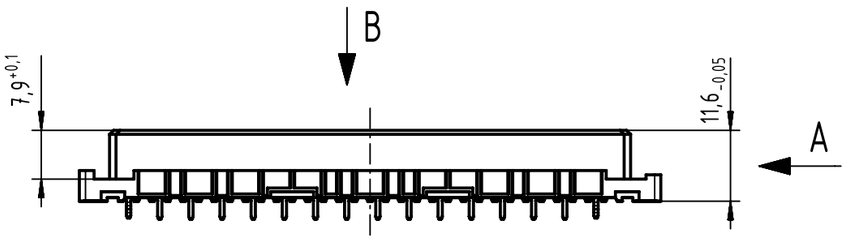

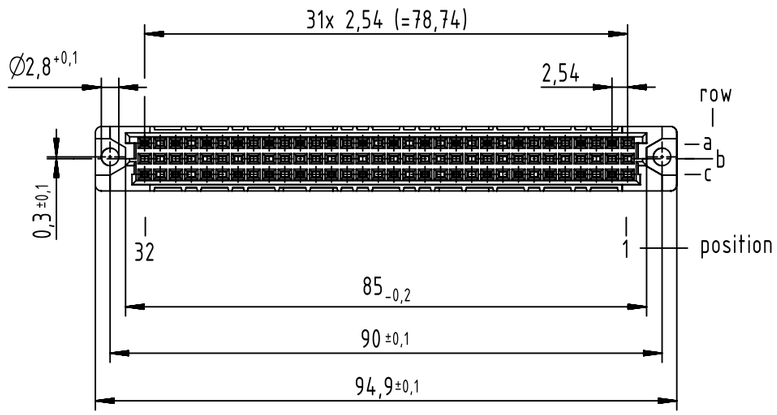

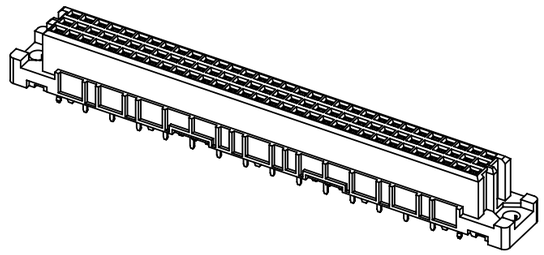

09 03 232 7855	3
09 03 232 6855	2
part-no.	performance level (1)

(1) further information see: DS 09032100001

All Dimensions in mm Original Size DIN A3	Scale 1:1	Free size tol. IEC 60603-2		Ref. Sub. TB 09 03 232 X855 / Mod.36400 / 27.06.2011	
All rights reserved Department EL PD	Created by STORCK	Inspected by LEHNERT	Standardisation HOFFMANN	Date 2016-03-31	State Final Release
	Title DIN Signal type C fem conn solder kinked str 32-pole				Doc-Key / ECM-Nr. 100173852/UGD/039/B 500000100625
HARTING Electronics GmbH D-32339 Espelkamp	Type TB	Number 0903232X855		Rev. B	Page 1/1

A3